O PAPEL vol. 77, num. 4, pp. 80 - 86 APR 2016

MILL APPLICATIONS OF HIGH-PERFORMANCE SCREEN ROTOR TECHNOLOGY

Authors*: Mathieu Hamelin[1]
Nicolau Portela[2]
Robert W. Gooding[1,2]

ABSTRACT

The screen rotor affects every aspect of pulp screen performance, including power consumption, capacity, fiber loss and debris removal efficiency. Fundamental studies have typically focused on the backflushing pulse induced by the rotor and, in particular, the pulse frequency and strength. More recently, small-scale turbulence and larger three-dimensional flow structures have been determined to be of at least equal significance. The present study reviews some of these fundamental studies and proposes a comprehensive model of the rotor action which embraces both pulsation and non-pulsation effects. Two novel rotor designs are discussed in the context of mill applications. One rotor is a solid-core design. As is typical, elements are attached to the periphery of the rotor to induce pressure pulsations. What is novel is that the leading edge of each element has a waveform to induce three-dimensional flow structures. With this waveform, the rotor is able to achieve higher capacities, or run at lower speeds to save energy, or operate with smaller slots for increased debris removal. A Brazilian mill used this novel rotor technology to achieve a 33% energy saving and reduce reject thickening factor from 3.0 to 1.6. A lower thickening factor reduces fiber loss and enhances runnability. The second rotor is based on foil-type design and has a thicker foil to increase wake turbulence. A dual foil-support design provides a very uniform rotor-cylinder gap and thus a more consistent and effective rotor action. Angled foils and supports ensure strings do not accumulate on the rotor. Mill case studies demonstrate the effectiveness of this rotor design in OCC headbox screen applications where there may be a high level of troublesome debris. The combination of theoretical studies and mill experiences supports a more comprehensive model of rotor performance as well as demonstrating the benefits of the advanced rotor designs.

Keywords: energy, power, pulp screen, rotor, runnability.

INTRODUCTION

Pulp screening is an essential operation in the production of high-value pulp and paper products, and screens are present in virtually every pulp and paper mill. Pulp screens have screen slots as narrow as 0.10 mm and thus are able to remove a high percentage of contaminants that would otherwise reduce paper appearance, strength, and surface quality. Pulp and paper producers have become reliant on screening because of its reliability, efficiency and low-cost.

The importance of pulp screening is increasing because of the increasingly stringent demands for high-quality paper and board products. The challenge of providing increasingly higher levels of cleanliness is compounded by the increasing quantity and variety of contaminants in recycled paper furnishes.

The basic parameters used to assess pulp screening are:

- Capacity – expressed either in terms of a volumetric or a mass-based accept flow, i.e. either L/min or t/day;
- runnability – which is a subjective parameter reflecting the ability of screens to operate reliably even during variations in feed consistency and furnish quality;
- efficiency – the degree of contaminant removal;
- power – as consumed by the screen rotor;
- fiber loss – the amount of fiber rejected by the final stage of the screen system.

The two performance components in a pulp screen are the cylinder and rotor. The screen cylinder has either holes or slots. "Accept" pulp flows through these apertures and leaves the screen through the accept port, while the oversize contaminants and reject pulp do not pass and exit from the reject port. The rotor backflushes the apertures and clears them of blockages. It also establishes the appropriate flow conditions adjacent the feed-side of the cylinder surface.

Screen aperture design is intrinsic to overall performance, with size being the primary variable. Narrow slots provide the highest levels of contaminant removal, but also tend to reduce capacity, illustrating a

***Authors references:**
1. Aikawa Fiber Technologies Inc., Canada.
2. Aikawa AFT do Brasil, Brazil.

Corresponding author:
Mathieu Hamelin, Aikawa Fiber Technologies Inc., 5890 Monkland Avenue, Suite 400, Montreal, Quebec, Canada, H2A 1G2.
Phone: +1 (514) 481-6111 ext. 298. E-mail: mathieu.hamelin@aikawagroup.com

O PAPEL vol. 77, num. 4, pp. 80 - 86 APR 2016

typical trade-off in optimizing the screen configuration for a particular application. The screening action that prevents the passage of contaminants can be divided into two fundamental mechanisms: "Barrier screening" prevents the passage of oversize debris that cannot fit through the apertures regardless of their orientation. "Probability screening", on the other hand, restricts the passage of contaminants that could pass through the apertures if presented in a particular way, but that tend not to pass because their size, shape or stiffness makes it difficult for the contaminants to follow the flow streamlines through the apertures.

Small slots have been made practical through the use of contours on the feed-side of the cylinder surface. Contours came into more widespread use in the 1980s and are believed to work by: 1) streamlining the flow through the slot, 2) inducing turbulence to disperse fiber flocs and any fibers that have accumulated at the slot entry, and 3) reducing the potential for fibers to become immobilized at the slot entry. Like slot width, contour height is specified according to the particular mill application considering the feed pulp consistency, pulp character, and nature of the contaminants.

Improved rotor technology has the potential to increase screen capacity for a given slot size or, conversely, to make smaller apertures possible without a loss of capacity. Power is an additional consideration with rotor technology. The trade-off in some cases then becomes one of power *versus* capacity (or *versus* minimum aperture size). There has been great diversity in rotor designs since pressure screens were developed in the 1960s. Four common designs are shown in **Figure 1**, though well over one hundred rotor designs have been used commercially. Rotors are generally classified as either "open" or "closed" designs. Open rotors have foils, and pulp passes on both sides of these foils. Closed rotors have a cylindrical core that elements are attached to, and pulp passes over the surface of the element adjacent the screen cylinder. In either case, the intent is for the foils or elements to pass within a few millimeters of the cylinder surface and to create a hydrodynamic effect that clears any pulp fibres that have accumulated within the cylinder apertures.

The present study considers two rotor technologies directed to improved screen performance:

- **Active-pulse rotor technology**. The back-flushing pulse induced by the rotor has been cited as the principle rotor action, with both pulse frequency and strength receiving study [1]. More recently, small-scale turbulence and large, three-dimensional flow structures have been determined to be of at least equal significance [2]. The present study reviews these fundamental effects and proposes a comprehensive model of the rotor action that embraces both pulsation and non-pulsation effects.
- **String-resistant rotor technology**. While screening is directed to contaminant removal, a high concentration of contaminants can challenge the operation of the screen itself. For example, hard, abrasive contaminants can lead to accelerated wear. Improved industrial-grade chrome surface treatments have been developed. Stringy contaminants can lead to build-ups on the rotor, which will grow to the point that the accumulated mass can jam between the rotor and screen cylinder. Design features that reduce string accumulation are discussed below.

The goal of the rotor is simple: to maximize screen capacity and promote the passage of fibres through the screen slots. The action of the rotor is, however, somewhat complex, combining several essential mechanisms. The relative role of each mechanism, as listed below, will vary according to the rotor design and its rotational speed:

Backflushing Pulses. The backflushing pulses developed by the screen rotor are derived from a decrease in the local pressure as the fluid (i.e. the pulp) accelerates through the gap between the rotor tip and the feed-side of the screen cylinder. This well-known fluid mechanics phenomenon is commonly called a "Venturi" or "Bernoulli Effect" [1,2]. Between pulsations, the flow through the screen apertures is driven by the pressure drop from the feed to the accept side of the cylinder. With the passage of the rotor foil or element, the pressure on the feed side of the cylinder decreases to the extent that the flow will temporarily reverse direction and pass from the accept to the feed side of the cylinder. This causes a backflush flow through the cylinder apertures and the removal of any fibres or other accumulations [3]. Smaller clearances between the cylinder and rotor, and increased rotor speeds will increase the pulse strength [4].

Fluid Activity. Large and small-scale turbulence and other forms of fluid "activity" are also important in the removal of incipient fibre accumulations within the apertures. Fibres may have become immobilized at the slot entry by a flow bifurcation that leads to fibre "trapping" [5]. High-frequency flow variability at the aperture entry will destabilize the balance of forces inherent to fibre trapping and prevent a significant accumulation of fibres. The bump rotor (**Figure 1a**) is an example of a rotor that relies more on fluid activity than discrete pulsations (i.e. flow reversals) given that the area of each bump passing close to the cylinder surface is relatively small. The arrangement of elements and their shapes has been used to develop fluid activity, as seen in the modified bump rotor (**Figure 1c**).

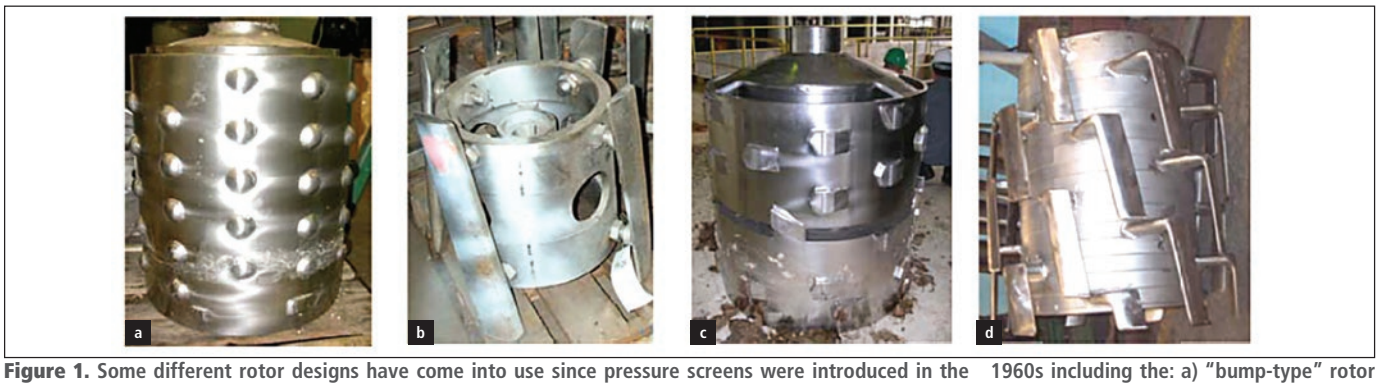

Figure 1. Some different rotor designs have come into use since pressure screens were introduced in the 1960s including the: a) "bump-type" rotor (1960s), b) "stud-and-nut" foil rotor (1970s), c) "modified bump" rotor (1990s), and d) cantilever foil rotor (2000's)

O PAPEL vol. 77, num. 4, pp. 80 - 86 APR 2016

Flow Field Development. The "screening zone" of pulp screen is defined as the annular space between the rotor and screen cylinder. If the rotor did not turn, flow would enter one end of the screening zone and pass axially through the screening zone, with the axial velocity (i.e. the velocity upstream of an aperture) decreasing steadily as flow is drawn off through the cylinder apertures. The screen rotor, however, induces a largely circumferential flow within the annular screening zone. The flow upstream of an aperture is relatively uniform through the length of the screening zone, even as the accept flow is drawn off, because the upstream flow is a vector sum dominated by the circumferential flow component. The rotor thus provides an easily controlled, relatively uniform, high-speed flow field ahead of the apertures that is critical to the preferential passage of fibres to contaminants [6].

Reject Zone Pressurization. While the screen rotor provides a relatively uniform flow field through the screening zone, water flows more easily through apertures than fibres. Pulp consistency thus increases axially as the flow spirals towards the reject end of the screening zone [7]. Higher consistencies will lead to increased accumulation of fibres within the apertures between backflush pulses. Anecdotal evidence suggests that most of the accept flow passes through the cylinder in the first third of the screening zone. Overall capacity is limited by not making full use of the remaining two-thirds of the cylinder. A rotor using angled rotor elements solves this problem by pressurizing the reject-end of the screening zone, which increases flow through the latter two-thirds of the cylinder apertures, and thus overall capacity [8]. Alternatively, instead of increased capacity, a smaller slot can be used for a higher degree of contaminant removal. In a third approach using improved rotor technology, rotor speed can be reduced without a loss of capacity. Reduced rotor speed is also supported by the use of an optimized element cross-section [9]. Power savings in excess of 30% have been achieved relative to some of the older rotor designs shown in **Figure 1**.

ACTIVE-PULSE ROTOR TECHNOLOGY

Basic Principles

Many rotors have been developed to accentuate the strength of the pressure pulsation for increased backflushing or to streamline the rotor elements for reduced power consumption. Certain other rotors have attempted to induce "fluid action" or wake turbulence to reduce any accumulation within the apertures between pulsations, as discussed above. The use of angled elements to pressurize the reject-end of the screening zone and improve screen performance has proven successful [8].

A novel rotor design was developed to combine all three of the aforementioned rotor mechanisms to further enhance screen performance. The rotor element has a cross-section that has been optimized to provide a strong suction pulse with minimal fluid drag (i.e. minimal power consumption). Angled elements pressurize the reject end of the screening zone to balance the accept flow and maximize capacity. The waveform on the leading edge of the rotor elements induces fluid activity. The stream tubes shown in **Figure 2a** were generated using computational fluid mechanics, and show how the flow over the element is disturbed by the waveform on the leading edge. Fluid activity is thus introduced simultaneously with the pressure pulse for maximum effect, and the activity persists in the wake of the element.

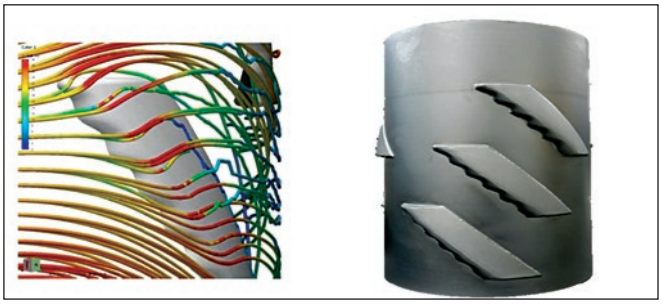

Figure 2. A novel rotor design using angled elements and a waveform on the leading edge of the elements. The image on the left (a) shows stream tubes passing over the element and demonstrates fluid action. Colour-coding shows velocity. The full rotor is shown on the right (b)

Increased fluid activity is the primary benefit of the waveform on the leading edge, but Figure 2a also indicates that the impinging flow tends to be channeled towards the "valleys" of the waveform. It would follow from the physics of the Bernoulli effect that a higher local velocity in the valleys would be reflected in a lower pressure – and stronger suction pulse.

Pilot Plant Tests

To evaluate the effect of the waveform feature on the suction pulse, rotors with a straight edge (GHC) and waveform edge (GHC2) were tested in an Aikawa Model 400 pilot plant screen (400 mm cylinder diameter; 498 mm cylinder height). A pressure transducer was installed on the cylinder surface. The pressure pulse traces shown in **Figure 3** indicate that the waveform feature led to an approximately 50% increase in the suction pulse at the same rotor speed.

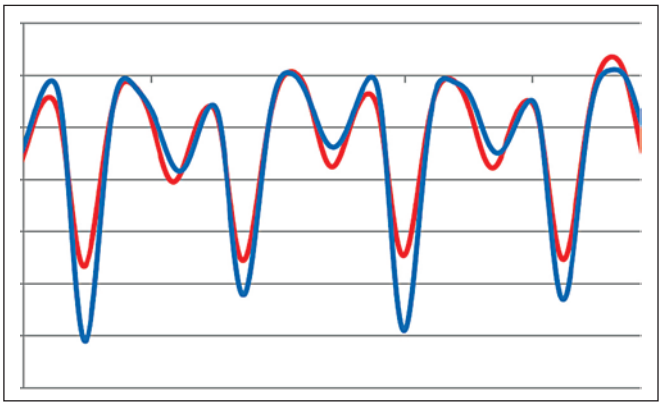

Figure 3. Pulse traces from the inside cylinder surface. Each rotor had two rows of two elements, thus four rotor pulses represent two rotations of the rotor. Smaller pulses represent disturbances from the adjacent row of elements. The GHC2 rotor provided an ~50% increase in pulse strength

O PAPEL vol. 77, num. 4, pp. 80 - 86 APR 2016

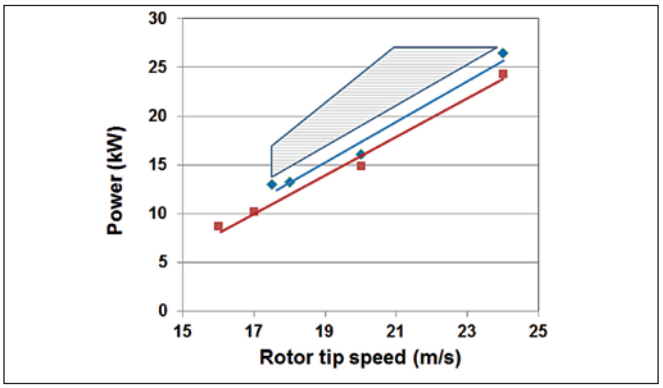

Figure 4. The superior energy savings available from the GHC2 rotor are shown to be derived from both: 1) a reduction in power at a given rotor tip speed ("Drop-In Savings") and 2) the ability to operate reliably at lower rotor tip speeds ("Slow-Down Savings")

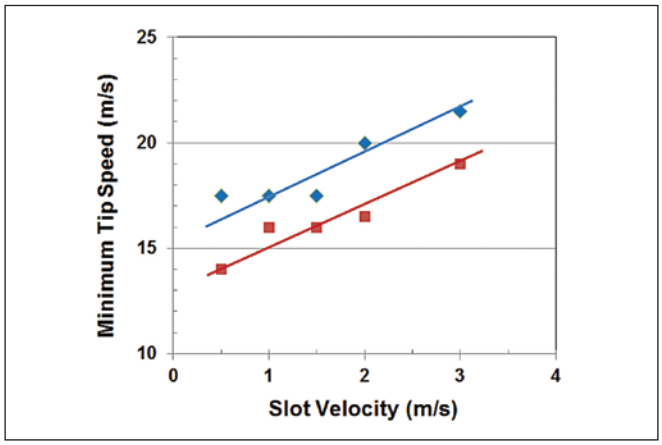

Figure 5. Minimum rotor tip speed is sensitive to slot velocity, with higher rotor speeds being required for higher slot velocities. For a given rotor type, an ~5 m/s difference in minimum tip speed was seen between slot velocities ranging from 0.5 to 3.0 m/s. A consistent ~2 m/s difference in minimum rotor tip speed was observed between the GHC and GHC2 rotors

The same pilot plant trials showed that the GHC2 rotor consumed slightly less power than the GHC rotor, as shown in **Figure 4**. More significantly, the GHC2 rotor is able to operate at a minimum rotor speed of about 2 m/s less than the GHC rotor, leading to an energy saving of about 30%. Even greater savings can be obtained in comparison to competitor and other older-generation designs, where power savings can reach 50%, as shown in Figure 4.

Minimum rotor speed was found to vary not only with the rotor model, but also with slot velocity. Slot velocity is calculated as the total accept flow divided by the open area of the cylinder. Higher slot velocities are seen in **Figure 5** to require higher minimum rotor speeds. An increase of ~5 m/s was seen as slot velocity was increased from 0.5 to 3.0 m/s. This relationship is important in guiding the initial selection of rotor speed for a particular mill installation, and in assessing the impact of variations in slot velocity that may follow from increased system tonnages or temporary changes in flow rate (e.g. "turn down"). Figure 5 also shows the ~2 m/s difference in minimum rotor speed between the GHC and GHC2 rotors that was seen in Figure 4, and that remains consistent over the range of slot velocities tested.

Another important finding from the pilot plant tests was that the reject thickening factor (i.e. the reject consistency divided by the feed consistency) was ~0.4 less with the GHC2 rotor than with the GHC rotor. The reduced level of thickening reflects the more effective removal of fibre accumulations from the cylinder apertures. Reduced thickening is associated with improved screen runnability and is especially important for screens operating at high feed consistency. The promising pilot plant results led to a program of trials in a range of mill applications, as described below.

GHC2 Mill Applications

GHC2 Case Study No. 1

The GHC2 rotor was installed in a Voith GR10 secondary fine screen in a Brazilian OCC mill. Slot width was 0.20 mm. Feed consistency was 1.2% and a flowsheet of the installation is shown in **Figure 6.** The screen had previously been operating with an OEM foil-type rotor with a tip speed of 14.5 m/s. Installation of the GHC2 rotor led to 33% "drop-in" savings in power, i.e. the power savings was achieved by replacing the rotor -- without changing rotor tip speed.

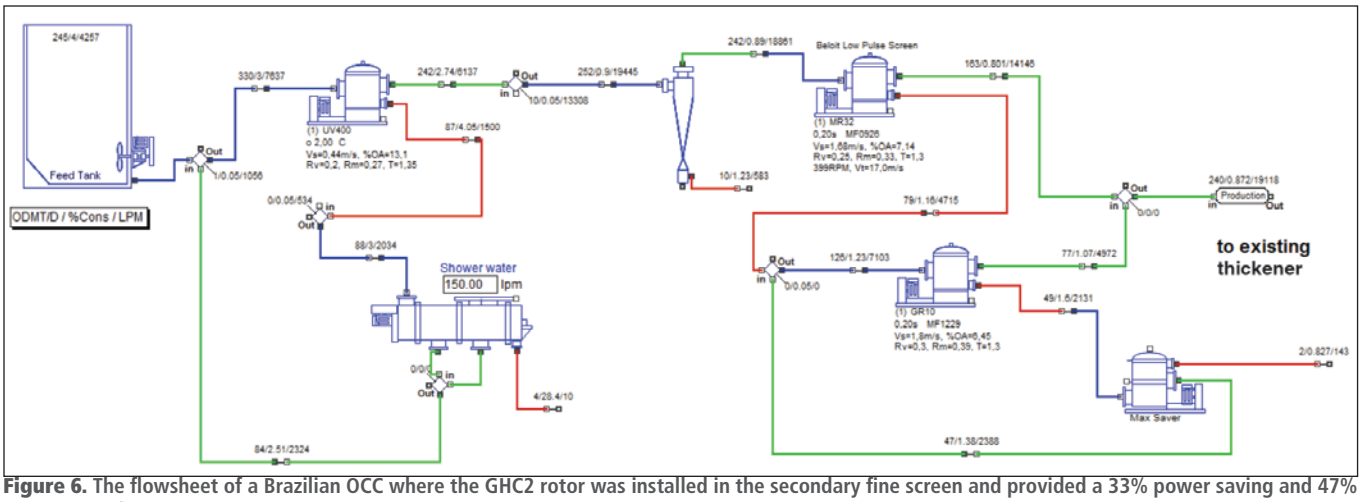

Figure 6. The flowsheet of a Brazilian OCC where the GHC2 rotor was installed in the secondary fine screen and provided a 33% power saving and 47% reduction in fibre loss

O PAPEL vol. 77, num. 4, pp. 80 - 86 APR 2016

Installation of the GHC2 rotor also caused a decrease in the reject thickening factor, from 3.0 to 1.6. The benefits of decreased reject thickening are two-fold: First, lower reject consistency leads to more stable screen operation because the slots near the reject end of the screening zone are much less likely to become plugged with pulp. Second, a lower reject consistency causes less good fibre to be rejected from the screen. Even though the system has a tertiary screen for fibre recovery, reducing the flow of fibre to the tertiary screen will lead to a proportionate decrease in overall system fibre loss. In this particular case, installation of the GHC2 rotor led to a 47% reduction in the mass rejected by the secondary screen.

GHC2 Case Study No. 2

The GHC2 rotor was installed in an Eastern-Canadian bleached kraft mill in an Ingersoll-Rand Model 210 primary screen with a feed consistency of 2.0%. A variable-frequency drive was installed to explore the minimum rotor speed. By virtue of being able to reduce rotor speed by ~2 m/s, the GHC2 rotor provided a 22% power saving relative to the benchmark GHC rotor, with both rotors being optimized for minimum speed. The mill also benchmarked the GHC2 rotor performance against some competitor rotors, at their existing speeds, and found:

- 58% power saving *versus* Competitor Rotor No. 1
- 55% power saving *versus* Competitor Rotor No. 2
- 46% power saving *versus* Competitor Rotor No. 3

The pulp furnish at this mill is quite abrasive and cylinder lifetime is typically less than one year. The waveform feature also appeared to help reduce cylinder wear. While cylinders typically show higher wear near the reject end of the screening zone, the cylinders run with the GHC2 rotor showed a more even top-to-bottom wear pattern -- even when operated at a relatively high speed of 29 m/s. Moreover, when the GHC2 rotor is operated at a lower rotor speed, both the frequency and energy of abrasive impacts are reduced, which further reduces wear. Impact energy of the abrasives is proportional to the square of their impinging velocity, and in turn to the square of the rotor tip speed.

GHC2 Case Study No. 3

A third mill case study was made at a Central European deinked pulp mill. In this case, the GHC2 rotor was installed in a primary Voith MSS 10/06 primary pulp screens with a 0.20 mm slot width and 0.6 m/s slot velocity. Feed consistency was 3.4% and the volumetric reject rate was 25%. An original equipment manufacturer (OEM) rotor was operated in a parallel primary screen with a comparable screen cylinder. The study showed:

14% less power was consumed by the GHC2 rotor relative to the OEM rotor at the same rotor tip speed of 18 m/s;

the full mill production could be handled by a single screen equipped with a GHC2 rotor operating at a tip speed of 18 m/s, enabling the second screen to be shut down and thus saving 43% in energy costs as well as additional maintenance costs;

stickies removal increased by 8 percentage points for the screen equipped with the GHC2 rotor relative to the OEM rotor at the same nominal mill operating conditions (including equivalent mass reject rates).

Other GHC2 Applications

The GHC2 rotor has been installed in a range of mill applications including OCC, kraft and deink pulp mills including screens as large as the Ahlstrom F6 screen (~1.5 m diameter). Some selected installations are shown in **Table 1**.

Table 1. Selected GHC2 Installations

Country	Furnish	Position	Screen Model	Principal Benefits
Canada	SWK	Primary	IR 210	22% energy savings
Finland	HWK	Primary	Ahlstrom M1600	33% energy savings
Finland	SWK	Secondary	Ahlstrom M800	12 kPa less dP
Germany	DIP	Primary	Voith MSS 10/06	43% energy savings
USA	SWK	Primary	IR 212	Improved runnability
Canada	OCC	Primary	KBC PS30	15% increased capacity
Finland	SWK	Primary	Ahlstrom F6R	20% less energy; reduced debris[1]
Finland	SWK	Secondary	Ahlstrom F4	27% less energy; reduced debris[2]
Finland	SWK	Tertiary	Ahlstrom F2	9% energy savings

[1] Reduced slot width from 0.27 mm to 0.20 mm.
[2] Reduced slot width from 0.30 mm to 0.20 mm

O PAPEL vol. 77, num. 4, pp. 80 - 86 APR 2016

Table 2. Benefits obtained the the GHC2 rotor relative to the GHC rotor under two possible operating scenarios

	Same Tip Speed	2 m/s Lower Tip Speed
Energy	~	30% less
Thickening Factor	0.4 less	0.2 less
Cylinder / Rotor Lifetime	=	~ 20% to 30% longer
Pressure Differential	7 kPa less	=
Maximum Slot Velocity	20% higher	10% higher
Maximum Feed Consistency	0.5% higher	=
Debris Removal Efficiency[1]	=	=
Debris Removal (using smaller slots)	substantially higher	higher

[1] at the same mass reject rate

Some general guidelines have been developed from mill studies and pilot plant work to understand how the GHC2 rotor benefits mill operations. **Table 2** summarizes these benefits under two possible scenarios: one where the mill simply substitutes the GHC2 rotor for a GHC rotor at the same operating speed, and the other where the rotor tip speed is decreased by 2 m/s to take advantage of the GHC2 rotor's more effective rotor action. Thus one can, for example, obtain an ~30% power savings from a lower tip speed or substantially increase debris removal by operating with a smaller slot, as two of the many possible strategies available by using a GHC2 rotor.

STRING-RESISTANT ROTOR TECHNOLOGY

Mills typically use a foil-type (open) rotor in screens located immediately upstream of the paper machine. This minimizes the possibility of pressure pulsations from the screen passing to the headbox, which would otherwise result in basis weight variations. Certain mills use the same screen for fine screening of the pulp. If the pulp is heavily contaminated with debris and stringy contaminants, operating problems can result. Traditional, foil-type, rotors offer a number of surfaces where strings can accumulate and build up, including on the foils themselves. In some mills, the accumulation of the debris can be significant, as shown in **Figure 7**, and the contaminants will jam between the rotor and cylinder, causing the screen to stop.

A rotor was developed specifically for such difficult applications and its key features are shown in **Figure 8**. This is a foil-type rotor so as to minimize any pressure pulsations that could be transmitted downstream. The thick foil cross-section provides effective pulsations and wake turbulence to clear any accumulated fibres from the screen apertures. The foils are staggered to distribute stresses on the screen cylinder and to develop some degree of fluid action.

The "swept" features of this rotor are distinctive and are particularly important to ensuring the good runnability of the rotor with highly-contaminated furnishes. The foil itself is inclined relative to the rotor axis so that any strings that impinge on the foil edge will slide along the foil and be released rather than accumulating on the foil. The support arms for the foils are set at an angle of 105 degrees from the rotor core as shown in Figure 8. Strings that impinge on the support arms will likewise move along the arm and be released. In this way, there are no locations for strings to build up on the rotor.

Figure 7. Stringy contaminants can hang up on the rotor foils and form into larger clumps which have the potential to jam between the cylinder and rotor

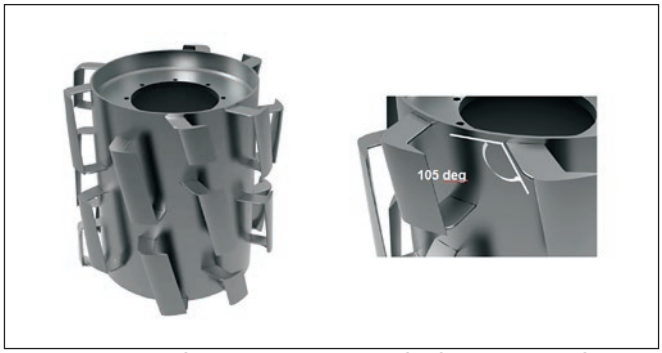

Figure 8. A novel, foil-type rotor (above left), features swept foils and support arms (above right) ensure there are no sites for strings or other debris to accumulate

O PAPEL vol. 77, num. 4, pp. 80 - 86 APR 2016

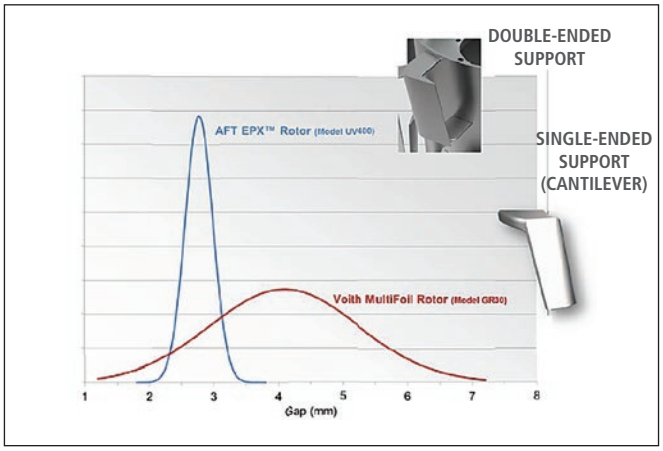

Figure 9. The double-ended foil support in the novel (EPX) rotor led to a more consistent rotor-cylinder clearance than the single-ended support found in a competitor rotor. A more consistent clearance gives a more consistent and effective rotor pulse and better screen runnability

An accurate rotor-cylinder clearance is provided by the dual-arm system for supporting the rotor foils. The backflushing pulse created by the rotor foil will be significantly diminished by an excessively large gap [4]. Measurements of the clearance in an industrial screen (**Figure 9**) show that the novel rotor shown in Figure 8 has rotor-cylinder clearances consistently between 2.5 and 3.5 mm. In contrast, clearances for an older-style OEM rotor were found to range from 1.5 to 7.0 mm. These large clearances would lead to a greatly diminished backflushing action. There are anecdotal reports of cylinders becoming plugged in regions that correspond to the location of these large clearances. Conversely, very small gaps create a very high pulse and can force deformable contaminants through the slots, thus decreasing debris removal efficiency.

NOVEL FOIL ROTOR MILL CASE STUDY

The novel foil rotor was installed in a Metso TL450 primary headbox screen at a European OCC mill. Feed consistency was 1.3% and the cylinder had 0.15 mm slots. The screen had previously been operating with an OEM helical foil rotor, but had suffered for a number of years with plugging problems and high feed-accept pressure differential. Installation of the novel foil rotor shown in Figure 8 eliminated the stringing and plugging problems. Pressure differential decreased. The mill is now able to run the screen reliably and without interruption. The mill also reported improved top-layer cleanliness.

CONCLUSIONS

Two novel rotor designs employing innovative features provide examples of how advanced technology can be used to enhance screen operation. The solid-core rotor with a waveform leading edge is of general use. It can be used to reduce power, increase contaminant removal and raise capacity. The foil rotor includes design features that resist the build-up of strings and other debris, and thus ensures good runnability with highly-contaminated furnishes that require a foil-type rotor. This equipment reflects the ongoing application of theoretical tools, plus practical mill knowledge, to develop technology that improves pulp screen systems. ■

REFERENCES

1. Karvinen, R., and Halonen, L., *The effect of various factors on pressure pulsation of a screen,* Paperi ja puu 66(7):80–83 (1984)
2. Feng, M., Gonzalez, J., Olson, J.A., Ollivier-Gooch, C., and Gooding, R.W., *Numerical simulation and experimental measurement of pressure pulses produced by a pulp screen foil rotor,* J. Fluids Eng. 127(2):347-357 (2005)
3. Martinez, D.M., Gooding, R.W., and Roberts, N., *A force balance model of pulp screen capacity, Tappi J.* 82(4):181–187 (1999)
4. Pinon, V., Gooding, R.W., and Olson, J.A., *Measurements of pressure pulses from a solid core screen rotor, Tappi J.* 2(10):9–12 (2003)
5. Salem, H.J., Gooding, R.W., Martinez, D.M, and Olson, J.A., *Some fundamental aspects of pulp screen capacity,* Proc. 15th Fundamental Research Symposium, Cambridge, England (2013)
6. Gooding, R.W., *The passage of fibres through slots in pulp screening,* M.A.Sc. thesis. The University of British Columbia, Canada (1986)
7. Gooding, R.W., and Kerekes, R.J., *Consistency changes caused by pulp screening, Tappi J.* 75(10) :109-118 (1992)
8. Konola, A., Poikolainen, I., Kovasin, K., Karppinen, J., and Gooding, R., *Reduced power consumption in softwood kraft screening at Botnia Aanekoski,* Paperi ja puu 91(3):27-32 (2009)
9. Luukkonen, A., Delfel, S., Olson, J.A., Ollivier-Gooch, C., and Pfleuger, C., *A computational fluid dynamic simulation of the pressure pulses produced by a solid core pulp screen rotor,* Appita J. 61:6 (2008)